ZONGSHEN INDUSTRIAL GROUP CO., LTD.
Chaoyouchang, Banan District, Chongqing, China

ZONGSHEN

ZS1000DQZ-8



ZONGSHEN INDUSTRIAL GROUP CO., LTD.
Chaoyouchang, Banan District, Chongqing, China

ZS1000DQZ-8

Operation and maintenance manual

ZONGSHEN INDUSTRIAL GROUP CO., LTD.
Chaoyouchang, Banan District, Chongqing, China

Schematic diagram of components for the ZS1000DQZ-8 model

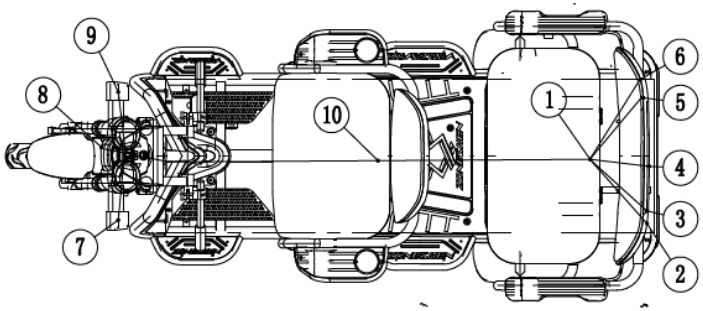

1、Controller
2、Rear left turn light
3、Brake light
4、Rear license plate lamp
5、Brake light
6、Rear right turn light
7、Front left turn light
8、headlamp
9、Front right turn light
10、Harness assembly

Noto:All high voltage having an outer covering with the colour orange

ZONGSHEN INDUSTRIAL GROUP CO., LTD.
Chaoyouchang, Banan District, Chongqing, China

User Notice

Precautions

Before using our company's products, please read the user manual and maintenance instructions carefully.

Special notice:

For the happiness of yourself and your family, please be sure to read and abide by the following clauses:

1. Before using this electric tricycle, please be sure to understand its basic characteristics and driving operation methods. Do not let minors, pregnant women, people with limited mobility, or those who cannot operate it use your beloved vehicle. Drinking and driving is strictly prohibited;

2. Please be sure to abide by traffic rules. Modifications to vehicles are prohibited, as is overloading;

3. After purchasing this electric vehicle, please promptly go to the vehicle management department to apply for a license plate, driving license, and driving permit according to local traffic regulations, to ensure that your driving complies with the requirements;

4. When driving, grip the handlebars tightly with both hands, and do not hang any objects from the handlebars to avoid affecting driving safety;

5. When driving, please control your speed; when turning, slow down in advance and turn on your turn signal to remind others, so as to avoid accidents;

6. Discarding discarded batteries carelessly can cause pollution to our home. Therefore, it is essential to hand over used batteries to vehicle maintenance service stations or technical service centers for unified disposal, so as to jointly protect our home.

ZONGSHEN INDUSTRIAL GROUP CO., LTD.
Chaoyouchang, Banan District, Chongqing, China

Catalogue

Chapter 1: Safety Instructions

Chapter 2: Vehicle Introduction and Identification

Chapter 3: Inspection before Driving

Chapter 4: Introduction to Driving Operations and Functions

Chapter 5: Use and Maintenance of Main Components

Chapter 6: Daily Maintenance and Professional Maintenance

Chapter 7: Reference Disposal Methods for Common Faults

Chapter 8: Electrical Schematic Diagram

Chapter 9: Complete Vehicle Parameter Configuration Table

ZONGSHEN INDUSTRIAL GROUP CO., LTD.
Chaoyouchang, Banan District, Chongqing, China

The first chapter safety instructions

Warning:

When driving an electric tricycle, you must pay attention to traffic safety. Before driving the vehicle, please carefully read the instructions in the chapter "Pre-driving Inspection" and follow them item by item to ensure the safety of both the driver and the vehicle.

Safe Driving rules

1.Before starting the vehicle, it is necessary to inspect the overall performance, brake system, lights, and horn to ensure they are functioning properly and effectively. Additionally, check for any loose fasteners to prevent accidents and damage to the vehicle.

2. Electric motorcycle drivers must pass the examination conducted by the traffic management department and obtain a driving license before they can drive. It is not allowed to lend the vehicle to someone without a driving license.

3. To avoid potential harm from other motor vehicles, you should strive to make yourself conspicuous while driving. To this end, please take note of the following:

(1) Wear clothing with bright colors.

(2) Do not get too close to other motor vehicles, and correctly use signal devices such as headlights and horn.

(3) It is strictly prohibited to cut in.

(4) Strictly abide by traffic rules in all regions.

(5) Speeding is the cause of many accidents, so the driving speed cannot exceed the legally permitted limit.

(6) When turning or changing lanes, turn signals should be activated to attract the attention of other drivers.

(7) Be especially careful when driving at intersections, entrance/exit of parking lots, and on motorways.

(8) When driving a vehicle, grip the steering handlebar tightly with both hands and step on the front pedal with both feet to maintain body balance.

(9) Be particularly careful when driving on rainy days. Reduce speed when encountering unknown road conditions such as manhole covers, oily and wet roads. Remember that the braking distance is approximately twice as long as on a sunny day.

Protective device

●To ensure personal safety, wear a helmet when driving, and if necessary, wear protective gear such as face masks, dustproof glasses, and gloves.

●Loose clothing is not allowed, as it may get caught by the joystick, starter arm, footrest assembly, or wheels, posing a risk to personal and driving safety.

Modification of vehicle

Note:

It is illegal to modify electric motorcycles or replace the original devices at will, as this cannot guarantee the driving safety of the electric motorcycle. Users must comply with the traffic management department's regulations on vehicle use. Any consequences arising from illegal modifications are the responsibility of the user.

Drive safely

● Drivers and passengers must wear helmets that comply with the GB811 standard correctly.

● Passengers should grip the handrails tightly while driving, and the occupants should use the footrests correctly, with both feet placed on the footrests;

● It is prohibited to install additional shelves or modify the cargo structure without authorization.

● Please do not attach any items to the steering handlebar, front fork, or fender, as this may cause unstable driving or slow steering response.

● It is strictly prohibited to drive with more than the maximum passenger capacity of the vehicle. See "Warning" in the preface for details.

Accessories

●The accessories produced by our company are specially designed and have been tested on electric motorcycles. As our company cannot test products from other manufacturers, you are responsible for the selection, installation, and use of non-company-produced accessories. Please follow the "Safe Driving Rules" and do the following:

● Carefully inspect the accessories to ensure they do not obstruct the line of sight, reduce ground clearance and roll angle, restrict the movement of suspension and steering mechanisms, or limit control operations.

● Please do not install additional electrical equipment, as this may overload the electric capacity of your electric motorcycle, causing the fuse to burn out. This could lead to the hazard of the lights not working during nighttime driving, rendering the vehicle inoperable.

ZONGSHEN INDUSTRIAL GROUP CO., LTD.
Chaoyouchang, Banan District, Chongqing, China

The second chapter Vehicle introduction and identification

VIN code location:

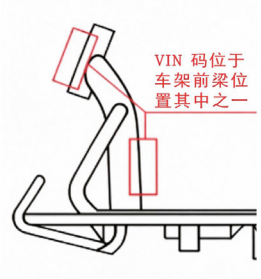

Riveting position of nameplate:



Nameplate engraving information:



Vehicle identification number:

Please record the vehicle identification number in the space provided. This will assist you in ordering spare parts from our company or for reference purposes in case your vehicle is stolen. The location of the nameplate is subject to the indication on the certificate of conformity

The third chapter Check before driving

1. Check whether the tire pressure of the front and rear tires is sufficient.
2. Check the tires for any obvious cracks, bulges, and abnormal wear.

Note: Low tire pressure, tire cracks, damage, and abnormal wear may affect the driving range or cause steering malfunctions or tire blowouts, potentially leading to accidents.

3. Check whether the air switch inside the toilet bowl is in the open state. If it is in the closed state, please turn the switch to the "ON" position.
4. Check whether the speed control handle and brake lever are functioning properly and effectively.
5. Check whether the headlights, turn signals, and other signaling lights are functioning properly.
6. Check whether the horn functions properly.
7. Check whether the steering is flexible. Shake the handlebar up and down, left and right, and back and forth to ensure there is no gap, looseness, overtightness, or clamping stagnation.
8. Check the rearview range of the rearview mirror. From the riding position, the rearview mirror should be able to observe the image within a range of 10 meters in length and 4 meters in width behind you.
9. Check whether the battery voltage is sufficient and can meet your riding needs.

ZONGSHEN INDUSTRIAL GROUP CO., LTD.
Chaoyouchang, Banan District, Chongqing, China

Considerations for cycling

1. If this is your first time driving an electric tricycle, please practice in an open area first. Only after you become proficient and master the riding skills can you drive on the road.

2. When using the vehicle, first turn on the power switch, step on the brake pedal or apply the handbrake, and then slowly rotate the accelerator handle with your right hand to gradually bring the electric tricycle to its optimal speed. Do not rotate the accelerator handle or pedal quickly, as it is extremely dangerous.

3. The "buzzing" sound emitted by the motor during startup is the sound of efficient magnetic field operation, which is a normal phenomenon. When the motor speed reaches its optimal state, the sound will disappear.

4. Please do not drive overloaded. Under the premise of ensuring safety, try not to brake or start frequently. In case of any situation, please brake and power off in advance, or coast down and brake to slow down.

5. When driving on wet roads, try to reduce your speed, avoid sudden turns and brakes, and maintain a safe driving distance.

6. When riding at night, please turn on your headlights. When making a turn, please turn on your turn signals and slow down.

7. Please use caution in rainy weather. Do not ride in areas where the water depth exceeds the motor's central axis to avoid damaging the motor.

8. Please refrain from riding an electric motorcycle with one hand, consciously abide by traffic rules, and drive in dedicated lanes.

ZONGSHEN INDUSTRIAL GROUP CO., LTD.
Chaoyouchang, Banan District, Chongqing, China

Precautions after riding

1. After using the electric motorcycle, please turn the operation switch to the "Off" position, turn off the power, and remove the key (add a lock if there is a head lock).

2. When parking, please pull up the parking brake lever and lock it for anti-theft purposes.

3. Please check the battery level in a timely manner and charge it promptly to avoid affecting your normal use next time.

The fourth chapter Driving operation and function introduction



Power lock

1.The power switch lock comes with two keys. Please keep one key as a spare and store it securely.

2. When using, insert the power lock key into the lock hole and rotate it clockwise to the "O" position. At this point, the power display light on the dashboard will be on, indicating that the power supply is connected to all control circuits.

3. When parking, rotate the key counterclockwise to the "⊠" position to turn off the main power.

4. When parking the vehicle with the headlock engaged, turn the handlebar to the left, rotate the key counterclockwise to the "Day" position, and then pull out the key. The handlebar is now locked!

Note:

In case of abnormalities, please quickly turn off the main power lock and cut off the power to ensure safety.

ZONGSHEN INDUSTRIAL GROUP CO., LTD.
Chaoyouchang, Banan District, Chongqing, China

instrument

1. The instrument panel provides an intuitive display of the working conditions of various functions of the entire vehicle. The battery gauge is equipped with an undervoltage protection device. When the battery voltage is insufficient, the pointer gauge will point to the red zone. At this time, it is necessary to charge immediately, otherwise it will affect the battery life.

2. When starting an electric motorcycle, the battery gauge may display some fluctuations in voltage, which is a normal phenomenon. To check the remaining battery power, you should drive steadily The readings are relatively accurate.

accelerator

1. The accelerator is a device for infinitely variable speed control, used to adjust the speed of the vehicle.

2. When starting the ride, turning the right handlebar accelerates the ride; otherwise, it will automatically reset and slow down.

3. When starting, please use your right hand to rotate the accelerator grip and develop the habit of rotating gently to avoid applying excessive force, which could lead to driving hazards.

4. The operation of the accelerator handlebar can only be controlled with the right hand.

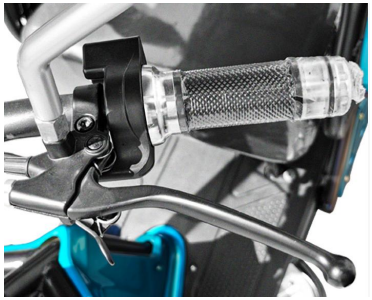

ZONGSHEN INDUSTRIAL GROUP CO., LTD.
Chaoyouchang, Banan District, Chongqing, China

brake pedal

The brake pedal is a device used to control the braking of the front and rear wheels. When it is pressed down, the power supply from the controller to the motor is cut off, and the motor stops working. At the same time, the front and rear brakes are activated, and the front and rear wheels stop rotating.


Brake Pedal

Function of the switch

1. On the left side of the handlebar are the headlight high and low beam switch, turn signal control switch, horn switch, and rear fog light switch. Please ensure to keep the vehicle in good condition when driving at night

Avoid using high beams for extended periods. If there is an oncoming vehicle, please switch to low beams to avoid dazzling the other driver. When changing lanes or making a turn, please use your turn signals in advance to ensure your driving safety. To alert other vehicles and pedestrians to your presence, please press the horn switch,

Enhance driving safety. Do not press and hold the horn switch for a long time, and strictly refrain from sounding the horn in places where it is explicitly prohibited. In case of foggy weather, please turn on the rear fog light switch.

2. On the right side of the handlebar are the night light, headlight integrated switch, and reversing switch. The brake lever has two positions: the first position is the night light indicator switch, which is used at night or in low light conditions; the second position is the headlight switch, which is used at night when there is no street light and the light is weak. The reversing switch is used when reversing, and please pay attention to the situation behind you when using it.

ZONGSHEN INDUSTRIAL GROUP CO., LTD.
Chaoyouchang, Banan District, Chongqing, China

Barrel

1. The seat bucket, also known as the battery box, is located under the seat cushion.

2. Open the toilet seat and you will find a set of batteries inside.

3. Please do not place flammable or explosive items in the bucket. If the charger needs to be placed in the seat bucket, shockproof measures must be taken. It can be stored with an outer packaging, and moisture prevention should be noted.

ZONGSHEN INDUSTRIAL GROUP CO., LTD.
Chaoyouchang, Banan District, Chongqing, China

The fifth chapter Use and maintenance of major components

一、The correct way to install the battery

Instructions Before Use

1.Before installing the battery, assemble the insulating sleeve of the battery pressure rod with the battery pressure rod first
2. Place the batteries according to the pattern shown in the right figure, then press down the battery pressing strip and tighten the rear foot baffle.
3. Connect the positive and negative power cables and the battery connection cables in order. The battery connection cable with a fuse should be connected between the second and third batteries.
4. During the assembly process, it is prohibited to short-circuit the positive and negative poles of the battery or the connected positive and negative wires. Personnel are also prohibited from touching live terminals or cables to avoid accidents such as fires and electric shocks.
5. Securely affix the two temperature controllers onto the side of the battery, and then firmly connect the other end of the temperature controller's plug connector to the temperature controller plug connector on the main cable, ensuring proper circuit continuity.

Warning:

It is strictly prohibited to mix batteries with flammable materials such as cardboard boxes. If such mixing occurs, our company will not bear any legal responsibility!

二、Installation,use,maintenance,and management of batteries and chargers

1. Before use, please confirm that the battery model matches the one provided by the company for the entire vehicle. For lithium-ion battery models, it is essential to use the dedicated lithium-ion battery that comes with the purchased vehicle model. Do not install the wrong battery, as this may prevent the vehicle from functioning properly.
2. Check the appearance of the battery for any damage. If there are any abnormalities, please contact the after-sales service station in a timely manner and do not disassemble it without authorization.
3. The electricity consumption of the new battery may be insufficient during its first use. This is a normal phenomenon, and it can be charged according to the instructions.
4. Lead-acid battery models are not compatible with lithium battery models. Models without lithium battery logos or instructions are all lead-acid battery models. It is strictly prohibited to install lithium batteries on lead-acid battery models without authorization. The company will not provide after-sales service for any issues caused by unauthorized modifications.

Schematic diagram of lead-acid battery connection

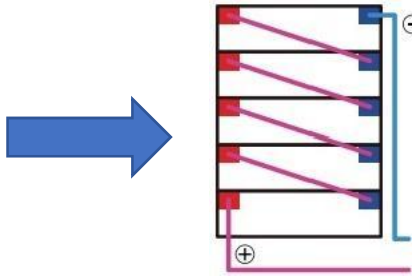

ZONGSHEN INDUSTRIAL GROUP CO., LTD.
Chaoyouchang, Banan District, Chongqing, China

Battery installation

1. Dealers should install batteries produced by the company's designated manufacturer and corresponding specifications and models;
2. Battery installation personnel of dealers should undergo pre-job training and pass the examination before taking up their posts;
3. Confirm that the battery is in good condition, without any damage or liquid leakage;
4. Before installation, turn off the vehicle's electric door lock switch to prevent dangerous accidents;
5. The battery cell should be placed horizontally and vertically as required, without any tilt, with even pressure applied to the four corners of the bottom, and the battery logo facing outward;
6. The batteries should be neatly arranged with appropriate spacing. The creepage distance between battery connection terminals must meet the requirements: rated voltage 60V, creepage distance 23mm; the tightening on the terminal studs should be appropriate to ensure good contact.
7. Properly arrange and connect the battery cables, and secure them to the positive and negative terminal posts of the battery using bolts. Tighten them appropriately to ensure good contact.
8. The battery pack should be evenly pressed with a battery pressure plate on top of the batteries. The pressure plate should be separated from the batteries with a rubber pad. Battery stops should be placed on both the left and right sides of the battery pack, and both the pressure plate and the battery stops should be fastened with bolts.

ZONGSHEN INDUSTRIAL GROUP CO., LTD.
Chaoyouchang, Banan District, Chongqing, China

Battery installation

9. Securely affix the two temperature controllers to the side of the battery, and then firmly connect the connector on the other end of the temperature controller to the temperature controller connector on the main cable, ensuring proper circuit continuity.
10. After checking that the installation is correct, conduct a test run. Once everything is confirmed normal, you can ride it.

Warning:

It is strictly prohibited to use non-standard batteries. The user shall be responsible for all consequences arising from the use of non-standard batteries.

Battery usage

1. For the first use, please drain the battery as much as possible, then fully charge it for use. Repeat this cycle 2-3 times to fully activate the battery's activity.
When the instrument indicates low battery, it is necessary to charge it in time. It is absolutely forbidden to drive with a low battery, as this will affect the battery's service life.
When driving, the speed should not be too fast. When starting, the handlebar should be operated slowly, and sudden acceleration and high-speed driving should be avoided as much as possible. This method can effectively extend the battery life and increase the driving range.
4. Please use the battery within the temperature range of -20° C to 55° C. The battery must not be immersed in water or wetted by corrosive liquids such as beverages. It should be kept away from heat sources, open flames, and flammable materials.

ZONGSHEN INDUSTRIAL GROUP CO., LTD.
Chaoyouchang, Banan District, Chongqing, China

Becareful

1. Before using the vehicle every day, it is necessary to promptly check whether the battery pressure rod and battery terminal bolt are loose, and whether the pressure rod insulation sleeve is damaged. If there are any abnormalities, timely maintenance, fastening, or replacement of the pressure rod insulation sleeve must be carried out.
2. Due to the characteristics of the battery, when the ambient temperature drops below 0℃, the battery capacity will decrease accordingly, and the driving range will also be reduced. This is a normal phenomenon. Please calculate the distance before departure and charge the battery in time.
3. As the ambient temperature rises, the battery capacity will gradually increase. However, do not use the battery in an environment where the temperature exceeds 55° C. Exceeding this temperature will cause irreversible damage to the battery.

Warning：

Avoid exposing the battery to rain or direct water spray, and certainly do not immerse it in water. When the entire vehicle wades through water that is deeper than the battery, it may cause water to enter the battery, leading to a short circuit and permanent battery failure. Under no circumstances should the battery be charged at this time, as it is highly likely to cause the battery to catch fire or explode.

The use of non-standard batteries is strictly prohibited. The user shall be solely responsible for any consequences arising from the use of non-standard batteries.

ZONGSHEN INDUSTRIAL GROUP CO., LTD.
Chaoyouchang, Banan District, Chongqing, China

Charging the battery

Charging starts: Please turn off the power supply on the vehicle before charging, and then insert the charging plug of the charger in the correct direction

Insert it into the vehicle's charging socket, and then plug the charger's AC power plug into a single-phase socket with an AC voltage of 220V and a frequency of 50Hz

The battery on the vehicle can be charged while seated, and the order must not be reversed. To determine the charging status: the charger has red and green lights

There are two types of indicator lights. When the charger's red indicator light is lit, it indicates that the power is connected and the charger is in a normal charging state;

When the charger indicator light turns from red to green, it indicates that the battery is almost fully charged. At this point, we recommend that you continue charging for another 1-2 hours

When it comes to charging, it can effectively fully charge the battery. Under normal circumstances, it takes no more than 8 hours to fully charge a lead-acid battery, while for a lithium battery

The battery takes no more than 6 hours to fully charge. Charging completed: After the battery is fully charged, the AC power plug should be disconnected first

First, unplug the charging plug from the charging port, then unplug the charging plug from the charging port. The order must not be reversed, otherwise it may cause damage to the charger

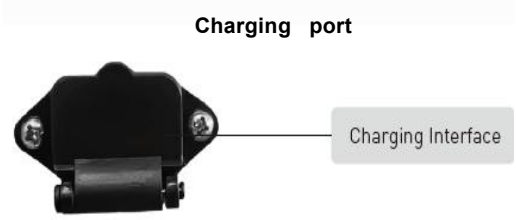

ZONGSHEN INDUSTRIAL GROUP CO., LTD.
Chaoyouchang, Banan District, Chongqing, China

Charging performance parameters

Charger model	60V32Ah
Input	176V-264V~2A 45-65Hz
Output	74.0V=4-4.5A
Applicable battery	60V32Ah Lead-acid battery pack

Be careful

1. Please use the original charger provided with the battery for charging, and do not use chargers of other brands or models.
2. Please try to charge the battery at a temperature between 0° C and 45° C. Charging may not be possible when the temperature is below 0° C. In colder regions, it is best to charge the entire vehicle or the battery indoors in an environment with a temperature above 0° C.
3. Avoid charging for more than 12 hours at a time to prevent overcharging and affecting the battery's service life. If the charger still does not turn off the charging light after being charged for more than 12 hours, please stop charging immediately and take it to a dealer's after-sales service station for inspection and repair.
4. Chargers should be avoided in areas with damp, harmful gases, and heat sources. They must be used in ventilated areas free of flammable materials. The charger casing has heat dissipation holes, and it is strictly prohibited for liquids or debris to enter. If there are any abnormalities, the power should be immediately turned off and the charger should be taken to a dealer for repair. Do not disassemble it yourself.
5. When using or storing the charger, it should be placed securely to prevent it from being touched or falling. If it is necessary to carry the charger outdoors, it should be properly protected and must not be bumped or collided, otherwise the charger's shell and wires may be damaged.

ZONGSHEN INDUSTRIAL GROUP CO., LTD.
Chaoyouchang, Banan District, Chongqing, China

High-voltage danger warning sign



Warning:
The charger must not be covered or blocked at the bottom while charging, otherwise it may cause poor heat dissipation and lead to Risk of charger damage or even fire: High voltage inside the charger, be careful of electric shock!

Storage and maintenance of batteries

1. It is recommended to store the battery in an environment with a temperature ranging from 10° C to 30° C and a humidity level between 45% and 85%. Do not store the battery in an environment with a temperature above 40° C, as this may lead to irreversible capacity loss of the battery.
2. Before long-term storage, lead-acid batteries should be fully charged, and it is prohibited to store them in a state of long-term partial discharge. At the same time, lead-acid batteries should undergo a charge-discharge cycle once a month to maintain battery activity.
3. The most suitable storage capacity for lithium batteries is around 50%. Long-term storage at less than 10% or more than 90% of capacity will result in irreversible capacity loss during battery testing. Additionally, lithium batteries should undergo a charge-discharge cycle every three months to maintain battery activity.
4. Under normal usage conditions, lead-acid water batteries should be regularly inspected for the level of acid solution. If the level is found to be too low, distilled water should be added. It is prohibited to add supplementary solution or any other unclean water.

Battery life
1. The capacity of a battery gradually decreases as the number of charge and discharge cycles increases. Under normal use, the lifespan of a lead-acid battery is approximately 1-2 years. Beyond this period, the battery capacity may experience significant degradation, or the battery may become unable to charge, affecting the vehicle's user experience.
2. Do not discard used batteries casually. They should be handed over to vehicle after-sales service for unified disposal to avoid polluting the environment.

ZONGSHEN INDUSTRIAL GROUP CO., LTD.
Chaoyouchang, Banan District, Chongqing, China

Battery and charger management

1. Dealers should strictly adhere to the battery and charger manufacturers, specifications, and models designated by the manufacturer for use.
2. Batteries and chargers should be stored or transported in a completely powered-off state. When stored, they should be neatly and orderly arranged, with sufficient passageways reserved for personnel and vehicle access and management. Fire escapes must not be blocked.
3. Batteries and chargers should be stored in a dry, clean, and well-ventilated warehouse with a temperature maintained between 5° C and 40° C. They should not be stored together with reactive chemicals or dusty items. Batteries and chargers should be placed on a base plate and kept at least 100mm off the ground. The products should not be exposed to direct sunlight, inverted, or placed lying down, and must not be subjected to any mechanical shock or heavy pressure.
4. During the loading, unloading, and transportation of batteries and chargers, they should be handled gently and properly protected to avoid damage that could affect their use. Dealers should conduct integrity checks on them.
5. Before installing and using batteries and chargers, they must be inspected. Unauthorized disassembly, modification, and other operations are prohibited. Additionally, chargers should bear a "Keep Dry" label, and batteries should have labels indicating "Chemical Type, Nominal Voltage, Rated Capacity".
6. For the batteries and chargers sold, dealers should clearly inform users that they are not allowed to disassemble or make modifications without authorization, and should strictly follow the requirements for operation and use to avoid accidents such as personal injury or fire. At the same time, users should be informed of the precautions for the use, maintenance, repair, and replacement of batteries and chargers, as well as the relevant matters such as the recycling channels for batteries and chargers. Do not discard used batteries at will to avoid polluting the environment.
7. Dealers of batteries and chargers that have been sold should maintain registration records, ensure that the records are authentic and effective, keep them for a long time, and accept supervision from the original equipment manufacturer (OEM) regarding the entire process of charger usage and registration.

三、Inspection of brake

1. Check the front wheel brake caliper to ensure that the brake clearance is within 10-15mm.
2. Check the rear wheel brake lever to ensure that the brake clearance is within 10-15mm..
3. Check the wear condition of the brake pads. If the brake pads are worn beyond the wear limit, they should be replaced.

DANGER:
When adjusting the brake cable or the tension rod nut, ensure that the thread of the central screw extends beyond the nut.





ZONGSHEN INDUSTRIAL GROUP CO., LTD.
Chaoyouchang, Banan District, Chongqing, China

Maintenance of front and rear tires as well as wheel hubs

Proper tire pressure is crucial for ensuring the comfort and stability of electric vehicles, as well as extending the lifespan of the tires.

Axle	Tyre size	LCI	Load (kg)	Speed (rating)	Speed (km/h)	Rolling Circ.(mm)	Tire pressure (kPa)	Rim size
Front	3.00-10	42	150	J	100	1235	225	MT2.15x10
Rear	3.00-10	42	150	J	100	1235	250	MT2.15x10

Chapter Sixth Daily maintenance and professional maintenance

Customer daily useinspection

Serial number	inspection items	Inspection content
1	Tire	Is the air pressure normal, and is the surface severely worn
2	Front and rear brakes	Is it working reliably
3	Loudspeaker	Is it working reliably
4	Luminaire	Is it working reliably
5	instrument	Are all signal lights and indicator lights working properly
6	ignition switch	Is it working reliably
7	rearview mirror	Is it clean, and is the observation range normal
8	Accelerator handle	Is it rotating flexibly, without any looseness or jamming
9	Front axle	Is the nut loose
10	Rear axle, steel plate	Is the nut loose

Please carefully inspect in strict accordance with this manual before driving, and if any faults are found, please take it to a special after-sales service station for repair and troubleshooting

ZONGSHEN INDUSTRIAL GROUP CO., LTD.

Chaoyouchang, Banan District, Chongqing, China

Regular inspection and maintenance

The first maintenance should be carried out within 2 months of purchasing the car, and thereafter, it is recommended to visit a special after-sales service station every 3 months for a comprehensive inspection and maintenance to assess the overall performance of the vehicle.

Serial number	inspection items	Check and maintain the content	Serial number	inspection items	Check and maintain the content
Routine safety and performance items			2	accelerator	Flexibility of rotation
1	Tire	Air pressure, tire wear level	3	Frame, rear fork	Each welding point and nut are tightened
2	braking system	Brake stroke, brake cable, brake pad, power-off switch	4	fork	Fasteners, steering bearings
3	Loudspeaker	Circuit solder joints and insulation	5	shock absorber	Damping stroke and other abnormalities
4	rearview mirror	Rearview angle, range, and nut fastness	6	lock	Functional Check
5	Luminaire	Irradiation position, angle, route, and insulation	Important components		
6	instrument	Instrument indication, circuit	1	Battery	Voltage equalization, electrolyte, circuit solder joints, and insulation
7	fastener	Nut fastening	2	Motor (electric motor)	End cap, bearing, Hall sensor, signal wire, motor circuit, and casing insulation
8	accelerator	Itinerary location	3	controller	Undervoltage, overvoltage protection
structural inspection			4	Charger	Charging current, charging voltage
1	Front and rear wheel hubs	End jump, radial jump, crack	5	main cable	Welding points, insulation, and wear condition of the circuit

[Note]:

1. Regularly add an appropriate amount of lubricating grease (No. 3 lithium-based grease) to the front axle and brake shaft.
2. Any malfunction caused by failure to conduct regular professional inspections is not covered by the warranty.
3. For other faults, please visit the authorized after-sales service station for inspection and repair.

Chapter Seventh Refer to troubleshooting methods for common faults

Fault symptom	Cause of failure	Exclusion method
Turn on the power, but the instrument does not display	1. The power lock is damaged or the plug-in is poorly connected 2. Poor contact between the power plug and the battery socket 3. Circuit breaker 4. Instrument malfunction	1. Check the power lock and plug-ins, repair or replace them 2. Check the power plug and socket, repair or replace them 3. Check whether the safety device needs to be replaced 4. Check whether the instrument needs to be replaced
Turn on the power The instrument display is normal No speed regulation	1. Battery is low and under-voltage 2. Accelerator damage 3. The power-off switch on the left and right brake levers is malfunctioning 4. Controller and motor faults	1. Fully charge the battery 2. Go to the service station to replace the accelerator 3. Go to the service station to replace the power-off brake lever or switch 4. Take it to the service station for repair or replacement of the controller or motor
Slow driving speed or Insufficient remaining mileage	1. Battery is not fully charged 2. Insufficient tire pressure 3. Frequent braking and starting, overload 4. Battery aging or overall vehicle degradation 5. Low ambient temperature	1. Fully charge the battery 2. Check the tire pressure before each use 3. Develop good cycling habits 4. Replace the battery 5. It is a normal phenomenon
The battery cannot be charged or is insufficiently charged.	1. The charger plug is not securely connected to the battery charging port 2. The connecting wire of the battery pack is loose or has fallen off 3. Charger malfunction	1. Check if the plug is loose and ensure it is firmly connected 2. Re-secure the battery pack connecting wires 3. Take it to the service station for repair or replacement of the charger

Chapter 8: Electrical Schematic Diagram

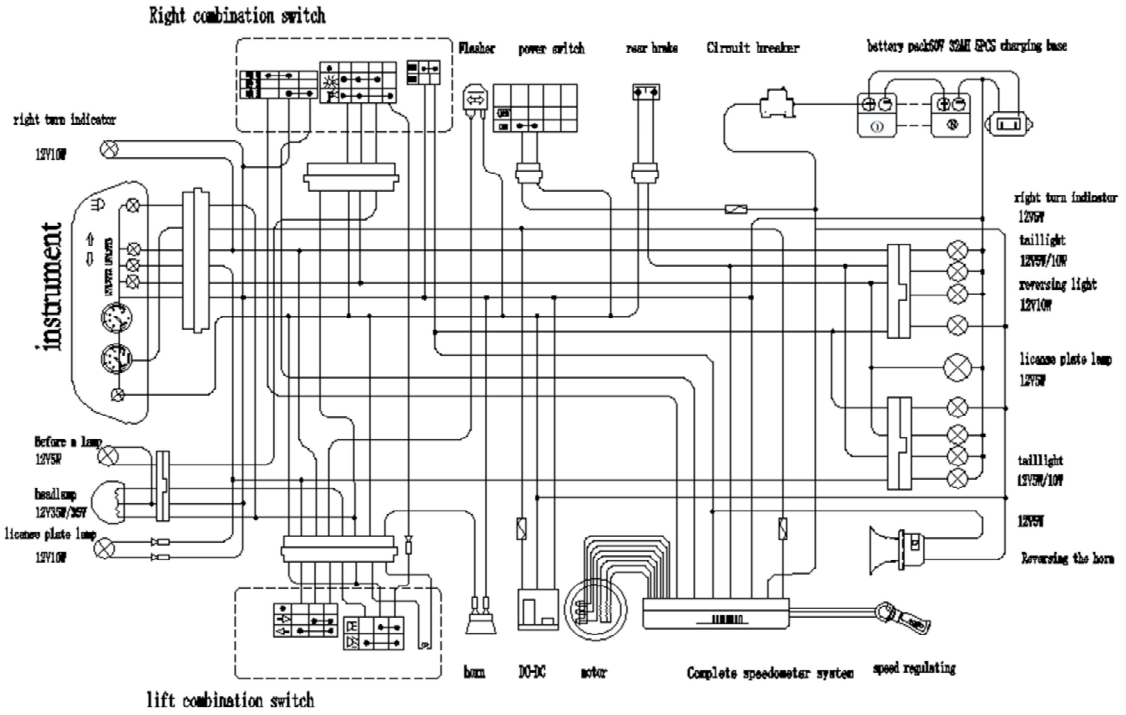

ZONGSHEN INDUSTRIAL GROUP CO., LTD.
Chaoyouchang, Banan District, Chongqing, China

Chapter 9: Complete Vehicle Parameter Configuration Table

No.	ZS1000DQZ-8A Complete vehicle configuration parameter table	
1	Overall dimension	2150*860*1095mm
2	Cargo box dimension	/
3	Wheelbase	1565mm
4	Track width rear	700mm
5	Motor	60V1000W BLDC
6	Controler	18-tube/Current limit 45A
7	Front suspension	Φ33 straight cylinder hydraulic inner spring shock absorber
8	Rear suspension	Cradle assembly + spring shock absorber
9	Rear axle	Split bridge package / speed ratio 1:10.03
10	Tyre (F/R)	Front/Rear 3.00-10
11	Brake type (F/R)	Front disc brake and rear drum brake
12	Max speed	25km/h
13	Mass in running order	122kg
14	Technically permissible maximum laden mass	322kg

ZONGSHEN INDUSTRIAL GROUP CO., LTD.
Chaoyouchang, Banan District, Chongqing, China

ZONGSHEN INDUSTRIAL GROUP CO., LTD.

http://www.huaihaiglobal.com